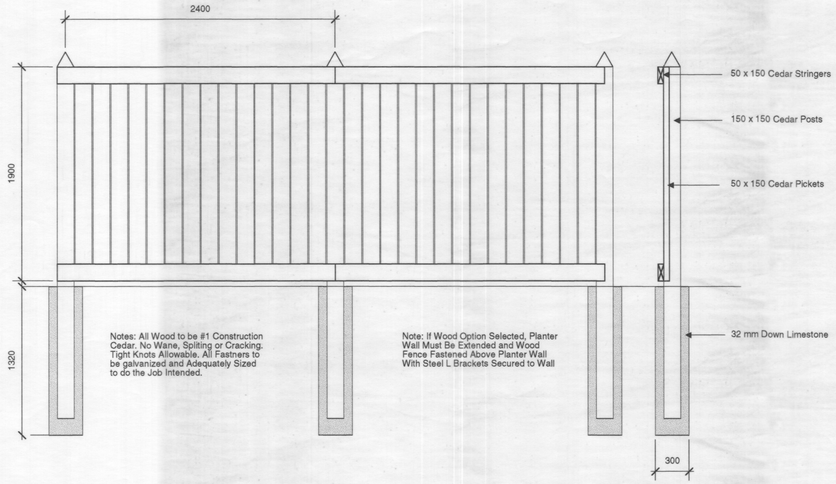

1 / L6 Wood Fence Alternative

NTS

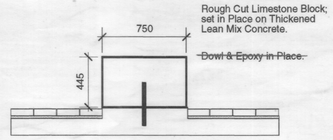

2 / L6 Limestone Blocks/ Typical Section

NTS

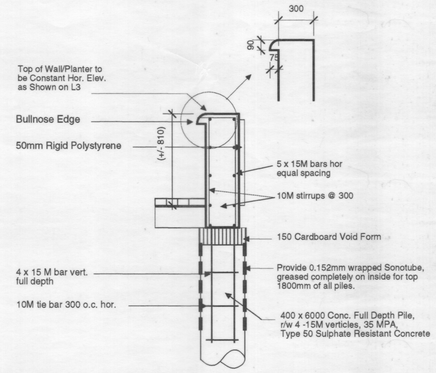

3 / L6 Raised Planter Wall/Pile Detail

NTS

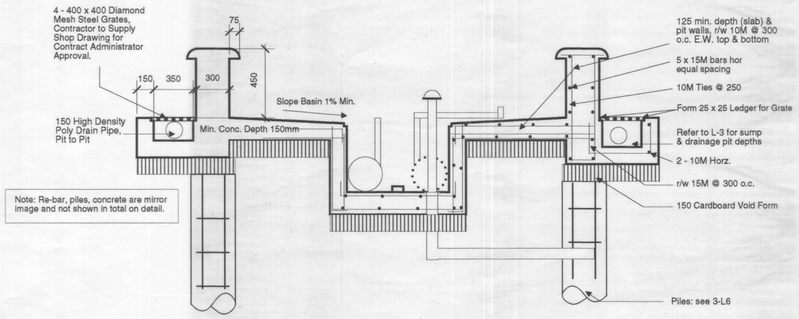

5 / L6 Section Through Fountain/Structural

NTS

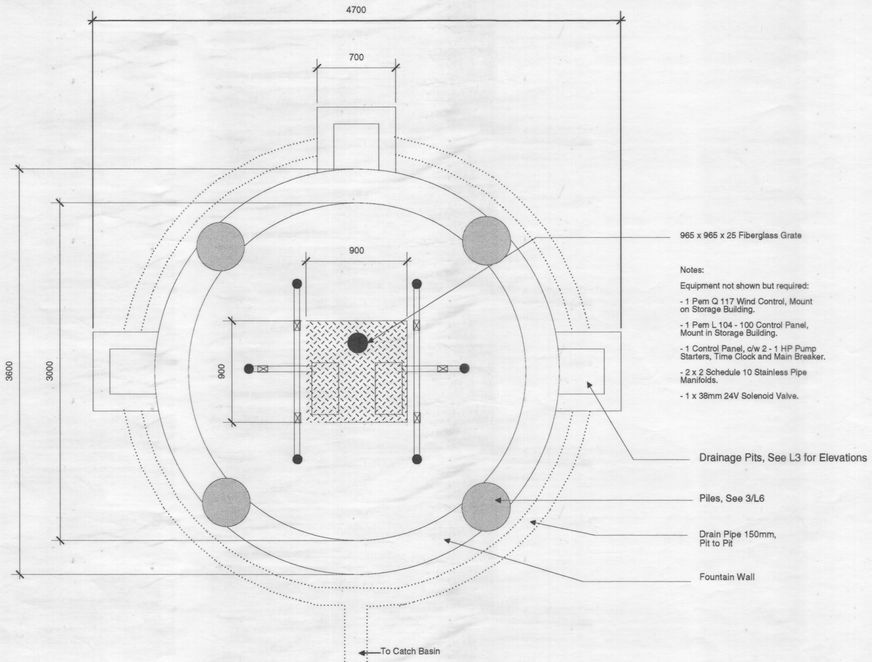

Notes:

Equipment not shown but required:

- 1 Pem Q 117 Wind Control, Mount on Storage Building.
- 1 Pem L 104 - 100 Control Panel, Mount in Storage Building.
- 1 Control Panel, c/w 2 - 1 HP Pump Starters, Time Clock and Main Breaker.
- 2 x 2 Schedule 10 Stainless Pipe Manifolds.
- 1 x 38mm 24V Solenoid Valve.

4 / L6 Fountain Plan

NTS

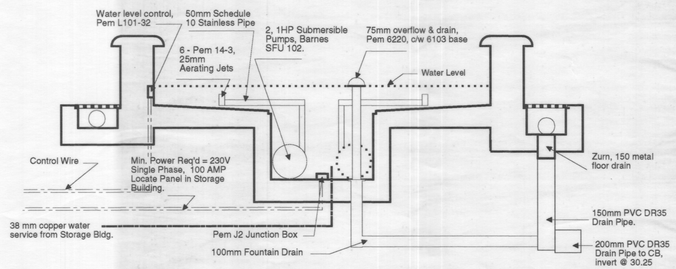

6 / L6 Section Through Fountain/Mechanical

NTS

Drawings and specifications as instruments of service, are the property of theLandscape Architect, the copyright in the same being reserved to him / her. No reproductions may be made without the permission of the Landscape Architect and when made, must bear his / her name. All prints to be returned to the Landscape Architect on request.

This drawing shall not be used for building purposes until countersigned by the Landscape Architect.

The contractor shall check all dimensions and other data on site and report any discrepancies to the Landscape Architect.

Figured dimensions to be taken in preference to scaled dimensions.

If in doubt please ask.

Notes

EXISTING	LEGEND - PLAN	PROPOSED	EXISTING	LEGEND - PLAN	PROPOSED	EXISTING	LEGEND - PROFILE	PROPOSED
	WATERMAIN			HYDRO		150mm W.M.	WATERMAIN	150mm W.M.
	HYDRANT			M.T.S.			HYDRANT	
	VALVE			CONCRETE			VALVE	
	LAND DRAINAGE SEWER			ASPHALT		300mm L.D.S.	LAND DRAINAGE SEWER	300mm L.D.S.
	WASTE WATER SEWER			PROPERTY LINE		250mm W.W.S.	WASTE WATER SEWER	250mm W.W.S.
	MANHOLE			SURVEY BAR				
	CATCH BASIN			CURB STOP				
	CURB INLET			C.B. LEAD				
	PARKING METER			SIDEWALK				
	STEAMHEAT			SIDEWALK RAMP				
	GAS		32.55	ELEVATIONS	32.55			

LOCATION APPROVED
UNDERGROUND STRUCTURES

SUPV. U/G STRUCTURES DATE
COMMITTEE

NOTE:

LOCATION OF UNDERGROUND STRUCTURES AS SHOWN ARE BASED ON THE BEST INFORMATION AVAILABLE BUT NO GUARANTEE IS GIVEN THAT ALL EXISTING UTILITIES ARE SHOWN OR THAT THE GIVEN LOCATIONS ARE EXACT. CONFIRMATION OF EXISTENCE AND EXACT LOCATION OF ALL SERVICES MUST BE OBTAINED FROM THE INDIVIDUAL UTILITIES BEFORE PROCEEDING WITH CONSTRUCTION.

B.M.
ELEV.

NO.	REVISIONS	DATE	BY
1	additions/deletions	9.7.95	D.W.
2	3-L6, 4-L6, 5-L6	9.7.95	D.W.
3	AS BUILT	11.06.96	LLW

David Wagner Associates Inc.
4 - 430 River Avenue Winnipeg, Manitoba. R3L 0C6 (204) 452-2426
LANDSCAPE ARCHITECTURE • URBAN DESIGN • GOLF COURSE ARCHITECTURE

DESIGNED BY D.M./D.W.	CHECKED BY
DRAWN BY D.M./D.W.	APPROVED BY
HOR. SCALE: As Shown VERT. SCALE: Not Applicable	RELEASED FOR CONSTRUCTION
DATE 08 / 95	DATE

LANDSCAPE ARCHITECT'S SEAL

the manitoba association of landscape architects
DAVID WAGNER
member no. 35

CONSULTANT DRAWING NO.
CAD9509(L6)

CORYDON AVE. BIZ STREET ENHANCEMENT COMMITTEE / CORYDON VILLAGE RESIDENTS ASSOCIATION

Corydon Ave. / Hugo St. Piazza

Details #2

CITY DRAWING NO.

SHEET 6 OF 10

L6